ENGLISH INSTRUCTIONS

⚠ WARNING

Read this Manual BEFORE using this equipment.
Failure to read and follow all safety and use information can result in death, serious personal injury, property damage, or damage to the equipment.
Keep this Manual for future reference.

Installation Instructions

1. The valve should be installed by a licensed contractor in accordance with local codes and ordinances.
2. This valve should be installed where it is accessible with sufficient clearance for cleaning, service, or adjustment.
3. Before installing the valve, be sure that the pipe ends are reamed and threads are cut to size. For valves with Quick-Connect tailpieces refer to "Quick-Connect Installation" instructions below.
4. Flush the lines to remove all loose scale, dirt and other foreign matter that can damage or clog the valve.
5. Install the regulator with the arrow on the body pointing in the direction of the flow.
6. Regulator may be installed vertically or horizontally (upright or inverted).
7. Start Up — Open cold water supply then hot water supply. Inspect for leaks.

NOTICE

- To tighten valve, first hand tighten followed by ¼-1 turn, using wrench.
- The valve should be inspected annually to assure maximum life and performance.
- LFN45B-M1 Valves are suitable for accessible outdoor or pit installations.

Maintenance Instructions

- To clean strainer or replace seat/stem module shut off supply, loosen Locknut and Lock Seal and back off Adjusting Screw.
- Remove Spring Cage, Spring, Washer and Slip Ring. Grasp Stem Nut with fingers or pliers and lift module from body.
- Replace module and reassemble valve.
- Readjust pressure setting.

Adjustment

Regulator is factory preset to 50 psi (344 kPa). To adjust pressure setting, loosen the lock nut and turn the adjusting bolt clockwise to increase pressure, counter clockwise to decrease pressure.

⚠ CAUTION

Any time a reducing valve is adjusted, use a pressure gauge to verify correct pressure setting. Do not bottom out adjusting screw on spring cage.

Bypass Feature

This regulator has a built-in thermal expansion bypass feature. This feature prevents downstream pressure from rising to more than 10 psi (69 kPa) above the supply pressure.

NOTICE

The Bypass feature will not prevent the pressure relief valve from opening on the hot water supply system with pressures above 150 psi (10.3 bar).

SEAT/STEM MODULE

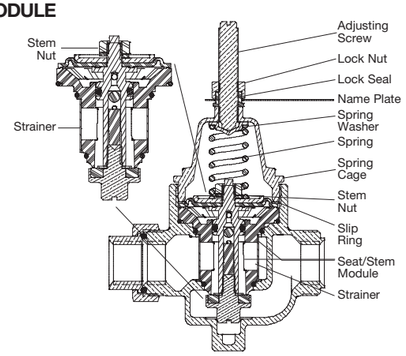

Repair Kits

KIT NO.	SIZE		ORDERING CODE	KIT INCLUDES
	in.	*mm*		
½ – 1 N45B/N45B-EZ-RK /LFN45B	½, ¾, 1	15, 20, 25	0006960	Seat/Stem Module

⚠ WARNING

For valves with CPVC or PEX end connections do not exceed the tubing manufacturers pressure and temperature ratings. Refer to the tubing manufacturers product specifications for that information.

Typical Installation

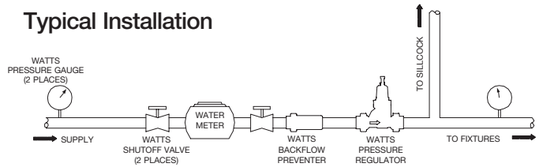

Series Installation

Series installations are recommended where very high supply pressure must be reduced to a very low downstream pressure. Reducing the pressure in stages eliminates whistling and noise.

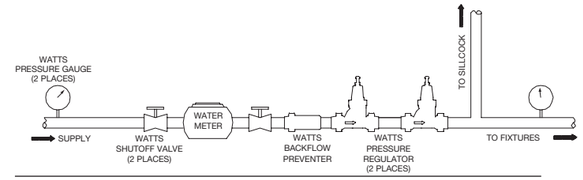

Parallel Installation

Parallel installations are recommended where high flow or low flow demand is intermittent/occasional. They are also used for installations where service cannot be interrupted.

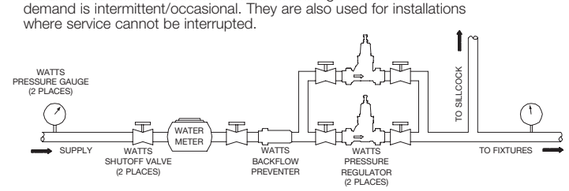

Quick-Connect Installation

To Connect:

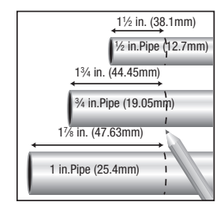

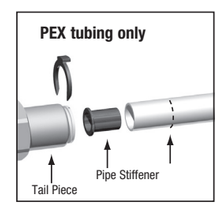

1. Mark pipe as shown. This is pipe insertion depth.
2. Clean pipe end.
3. If using PEX tubing, insert pipe stiffener (provided) into end of pipe.
4. Push tubing into tailpiece up to mark.
5. Insert collet clip.

To Disconnect:

1. Remove collet clip.
2. Depress collet.
3. Pull tubing from tailpiece.

Troubleshooting — High System Pressure

If the downstream system pressure is higher than the set pressure under no flow conditions, the cause could be thermal expansion, pressure creep or dirt/debris on the seat.

Thermal expansion occurs whenever water is heated in a closed system. The system is closed when supply pressure exceeds 150 psi (10.3 bar), or a check valve or backflow preventer is installed in the supply piping.

You must make provisions for pressure relief protection of your plumbing system and components. The use of a relief valve such as the Watts 530C, BRV, Governor 80, or 3L or potable water expansion tank such as the Watts DET, PLT or DETA may be required.

To determine if this is the result of thermal expansion, try briefly opening the cold water tap. If the increased pressure is caused by thermal expansion, the pressure will immediately be relieved and the system will return to the set pressure.

Watts offers a pressure test gauge, model 276H300 to assist you in determining if you have high water pressure. The 276H300 when attached to a hose bibb registers the highest pressure reading over the period of time it is left on the system.

AVERTISSEMENT : Ce produit contient des produits chimiques connus par l'Etat de Californie comme étant cancérigènes et pouvant provoquer des anomalies congénitales ou affecter la capacité de reproduction.
Pour plus d'informations : www.watts.com/prop65

Garantie limitée : Watts Regulator Co. (la « Société ») garantit que chacun de ses produits est exempt de vice de matériau et de fabrication dans des conditions normales d'utilisation pour une période d'un an à compter de la date d'expédition d'origine. Dans l'éventualité où de tels vices se manifesteraient pendant la période de garantie, la Société, à sa discrétion, remplacera ou reconditionnera le produit sans frais.
LA PRÉSENTE GARANTIE EST EXPRESSE ET REMPLACE LA SEULE GARANTIE OFFERTE PAR LA SOCIÉTÉ POUR CE PRODUIT. LA SOCIÉTÉ N'OFFRE AUCUNE AUTRE GARANTIE, EXPRESSE OU TACITE. PAR LA PRÉSENTE, LA SOCIÉTÉ REJETTE SPÉCIFIQUEMENT TOUTE AUTRE GARANTIE, EXPRESSE OU TACITE, NOTAMMENT TOUTE GARANTIE TACITE DE QUALITÉ MARCHANDE OU D'ADAPTATION À UN BUT PARTICULIER.
Le recours décrit dans le premier paragraphe de cette garantie constitue le seul recours à toute violation de la présente garantie. La Société ne saurait être tenue responsable de tout dommage accessoire, spécial ou indirect, y compris, de façon non limitative : la perte de profits ou le coût afférent à la réparation ou au remplacement d'autres biens qui seraient endommagés par suite du fonctionnement incorrect du/du produit ; d'autres coûts résultant de frais de main-d'œuvre, de retards, de vandalisme, de négligence, d'une obstruction causée par des matériaux étrangers, de dommages causés par une eau impropre, des produits corrosifs ou par tout autre événement échappant au contrôle de la Société. La présente garantie est déclarée nulle et non avenue en cas d'usage abusif ou incorrect, d'application, d'installation ou d'entretien incorrects ou de modification du produit.
Certains États n'autorisent pas les limitations de durée d'une garantie tacite ou l'exclusion ou la limitation des dommages accessoires ou indirects. Les limitations susmentionnées peuvent donc ne pas s'appliquer à vous. Cette garantie limitée vous donne des droits spécifiques et il se peut que vous ayez aussi d'autres droits qui varient d'un État à l'autre. Veuillez vous référer aux lois applicables de l'État pour déterminer vos droits en la matière. **DANS LA MESURE PERMISE PAR LA LOI APPLICABLE DE L'ÉTAT, TOUTES LES GARANTIES TACITES NE POUVANT PAS ÊTRE REJETÉES, Y COMPRIS LES GARANTIES TACITES DE QUALITÉ MARCHANDE ET D'ADAPTATION À UN BUT PARTICULIER, SONT LIMITÉES QUANT À LEUR DURÉE À UN AN À COMPTER DE LA DATE D'EXPÉDITION D'ORIGINE.**

Garantía limitada: Watts Regulator Co. (en adelante, "la Compañía") garantiza, por un período de un año a partir de la fecha de embarque original, que sus productos están libres de defectos de materiales y mano de obra bajo condiciones de uso normal. En caso de que se encuentren tales defectos dentro del período de garantía, la Compañía reemplazará o reacondicionará, a su elección, el producto sin costo alguno.
LA GARANTÍA AQUÍ ESTIPULADA SE OTORGA EN FORMA EXPRESA Y ES LA ÚNICA GARANTÍA OTORGADA POR LA COMPAÑÍA EN RELACIÓN CON EL PRODUCTO. LA COMPAÑÍA NO OTORGA NINGUNA OTRA GARANTÍA, YA SEA EXPRESA O IMPLÍCITA. LA COMPAÑÍA POR LA PRESENTE RENUNCIA ESPECÍFICAMENTE A TODAS LAS DEMÁS GARANTÍAS, EXPRESAS O IMPLÍCITAS, INCLUYENDO SIN LIMITACIÓN, LAS GARANTÍAS IMPLÍCITAS DE APTITUD PARA LA COMERCIALIZACIÓN E IDONEIDAD PARA UN PROPÓSITO EN PARTICULAR.
La solución descrita en el primer párrafo de esta garantía constituirá la única y exclusiva solución por incumplimiento de garantía. La Compañía no se hará responsable por daños accidentales, especiales o indirectos, incluyendo sin limitación, la pérdida de ganancias o el costo de reparación o reemplazo de otra propiedad que resulte dañada por el mal funcionamiento de este producto, otros costos resultantes por mano de obra, retardos, vandalismo, negligencia, obstrucciones ocasionadas por materiales extraños, daños debidos a condiciones adversas del agua, químicos o cualquier otra circunstancia sobre la cual la Compañía no tenga control. Esta garantía no tendrá validez en cualquier caso de abuso, uso indebido, aplicación incorrecta, instalación inadecuada, o mantenimiento adecuado o alteración del producto.
Algunos Estados no permiten limitaciones de la duración de una garantía implícita y algunos Estados no permiten la exclusión o limitación de daños accidentales o indirectos. Por lo tanto, es posible que las limitaciones anteriores no sean aplicables en su caso. Esta garantía limitada le da derechos legales específicos; usted podrá tener también otros derechos que varían según el Estado. Usted debe consultar las leyes estatales aplicables para determinar sus derechos. **EN LA MEDIDA EN QUE SEA CONGRUENTE CON LAS LEYES ESTATALES APLICABLES, QUEDA ANULADA GARANTÍA IMPLÍCITA QUE NO SEA RECHAZADA, INCLUYENDO LAS GARANTÍAS IMPLÍCITAS DE APTITUD PARA LA COMERCIALIZACIÓN E IDONEIDAD PARA UN PROPÓSITO EN PARTICULAR, SE LIMITA EN SU DURACIÓN A UN AÑO A PARTIR DE LA FECHA DEL EMBARQUE ORIGINAL.**

USA: Tel: (978) 689-6066 • Fax: (978) 975-8350 • Watts.com
Canada: Tel: (905) 332-4090 • Fax: (905) 332-7068 • Watts.ca
Latin America: Tel: (52) 81-1001-8600 • Fax: (52) 81-8000-7091 • Watts.com

IS-N45B-M1 1427 EDP# 1915390

© 2014 Watts

USA: Tel: (978) 689-6066 • Fax: (978) 975-8350 • Watts.com
Canada: Tel: (905) 332-4090 • Fax: (905) 332-7068 • Watts.ca
Latin America: Tel: (52) 81-1001-8600 • Fax: (52) 81-8000-7091 • Watts.com
IS-N45B-M1 1427 EDP# 1915390 © 2014 Watts

ADVERTENCIA: Este producto contiene sustancias químicas que en el Estado de California se conocen como causantes de cáncer y malformaciones u otros daños reproductivos.
Para más información: www.watts.com/prop65

WARNING: This product contains chemicals known to the State of California to cause cancer and birth defects or other reproductive harm.
For more information: www.watts.com/prop65

Limited Warranty: Watts Regulator Co. (the "Company") warrants each product to be free from defects in material and workmanship under normal usage for a period of one year from the date of original shipment. In the event of such defects within the warranty period, the Company will, at its option, replace or recondition the product without charge.
THE WARRANTY SET FORTH HEREIN IS GIVEN EXPRESSLY AND IS THE ONLY WARRANTY GIVEN BY THE COMPANY WITH RESPECT TO THE PRODUCT. THE COMPANY MAKES NO OTHER WARRANTIES, EXPRESS OR IMPLIED. THE COMPANY HEREBY SPECIFICALLY DISCLAIMS ALL OTHER WARRANTIES, EXPRESS OR IMPLIED, INCLUDING BUT NOT LIMITED TO THE IMPLIED WARRANTIES OF MERCHANTABILITY AND FITNESS FOR A PARTICULAR PURPOSE.
The remedy described in the first paragraph of this warranty shall constitute the sole and exclusive remedy for breach of warranty, and the Company shall not be responsible for any incidental, special or consequential damages, including without limitation, lost profits or the cost of repairing or replacing other property which is damaged if this product does not work properly, other costs resulting from labor charges, delays, vandalism, negligence, toiling caused by foreign material, damage from adverse water conditions, chemical, or any other circumstances over which the Company has no control. This warranty shall be invalidated by any abuse, misuse, misapplication, improper installation or improper maintenance or alteration of the product.
Some States do not allow limitations on how long an implied warranty lasts, and some States do not allow the exclusion or limitation of incidental or consequential damages. Therefore the above limitations may not apply to you. This Limited Warranty gives you specific legal rights, and you may have other rights that vary from State to State. You should consult applicable state laws to determine your rights. **SO FAR AS IS CONSISTENT WITH APPLICABLE STATE LAW, ANY IMPLIED WARRANTIES THAT MAY NOT BE DISCLAIMED, INCLUDING THE IMPLIED WARRANTIES OF MERCHANTABILITY AND FITNESS FOR A PARTICULAR PURPOSE, ARE LIMITED IN DURATION TO ONE YEAR FROM THE DATE OF ORIGINAL SHIPMENT.**

IS-N45B-M1

LFN45B-M1

Water Pressure Reducing Valve
Válvula reductora de la presión del agua
Régulateur de pression d'eau

½" - 1" (15-25mm)

N45BDU-M1

N45BDU-QC-M1

Installation Instructions
Instrucciones de instalación
Instructions d'installation